NeoBrite - Hybridization system

NB-12-0001

NeoBrite - Hybridization system

#Cat: NB-12-0001

Thank you for purchasing our denaturation and hybridization system. This manual describes the functions and operation of the unit. Please read this manual carefully before use. Keep it for future use if you encounterany difficulties.

Opening check

Please check the instrument and the appendix with the packing list when you open the box. If you find a problem, please contact us.

Warnings and safety instructions

1. Important information:

Before use, the operator must have a perfect understanding of how to use the instrument. Please read thismanual carefully before use.

Do not operate the unit before reading this manual. Please read the instructions below.

2. Safety:

Handling, maintenance and repair of the unit must comply with the following guidelines and warnings. Failure to do so may affect the useful life of your unit.

The product is intended for indoor use.

Please read the manual carefully before use.

The user must not open and repair the unit himself, as this will result in the loss of the warranty. If you have a problem, please contact us.

Before switching on, make sure that the voltage used matches the voltage required. The rated load of the electrical outlet must not be less than the demand. If the power line is damaged, it must be replaced. Make sure there are no problems with the power cord, and plug it into a fixedsocket. Hold the plug when removing the power cable and do not pull it out.

The instrument should be stored in a place protected from high temperatures, dust, water and sunlight. The room must be well ventilated, free from corrosive gases and disturbing magnetic fields.The unit should be placed away from sources of heat. The grille on the unit is designed for ventilation.To avoid overheating, do not cover the ventilation grille. If you are using more than one device at thesame time, the distance between two devices must be at least 1m.

Switch off when finished. Remove the connector when you are not using the device for a long time, and protect it from dust.

During normal operation, the temperature of the plates is very high. The appliance may contain hot or boiling liquids. Therefore, do not touch the appliance without protection.

Unplug the device and contact us in the following cases:

Liquid has been introduced into the instrument

- Appearance of smoke
- Abnormal operation: such as an abnormal sound or smell
- Device falls or outer casing is damaged
- Malfunction

3. Maintenance

The unit should be cleaned with an alcohol-soaked cloth to ensure good heat transfer.

Contents

Chapter 1 Introduction

The NeoBrite (NB-12-0001) is a microprocessor-controlled unit with a PID control method, ideal for denaturation and hybridization steps for 12 slides. The hermetically sealed heated lid and heated water reservoirs ensure uniform temperature and humidity. Four operating modes (Denaturation/Hybridization, Hybridization, Custom and In-Situ PCR) are available.

Features:

1. Touch screen for easy reading and programming.
2. Power failure recovery function: when the power supply is restored, the machine automatically starts the continuation of the program in progress at the time it stopped.
3. Heated lid maintains even temperature
4. Real-time display of temperature curve.
5. Recording of 60 programs.
6. Data export function

Chapter 2 Specifications

1. Normal operating conditions

Ambient temperature: 5°C ～30°C

Relative humidity: ≤70%.

Stabilized power supply: AC220V~ 50-60Hz 2.0A

2. Basic parameters and performance

Model	NB-12-0001
Temperature setting range	RT+5~99.9°C
Time setting range	1min ~ 99h59min
Setting accuracy temperature	≤±1°C
Temperature uniformity	≤±1°C
Heating time (37°C - 95°C)	≤3min
Cooling time (95°C -45°C)	≤7min
Capacity	12 Blades
Maximum power	350 W
Dimensions (mm)	420×225×143
Net weight (kg)	5,8

Chapter 3 Preparations

This chapter introduces the structure of the NeoBrite, the functions of the touchscreen and some preparations to be made before use. You should read this chapter before using the device for the first time.

1. Description

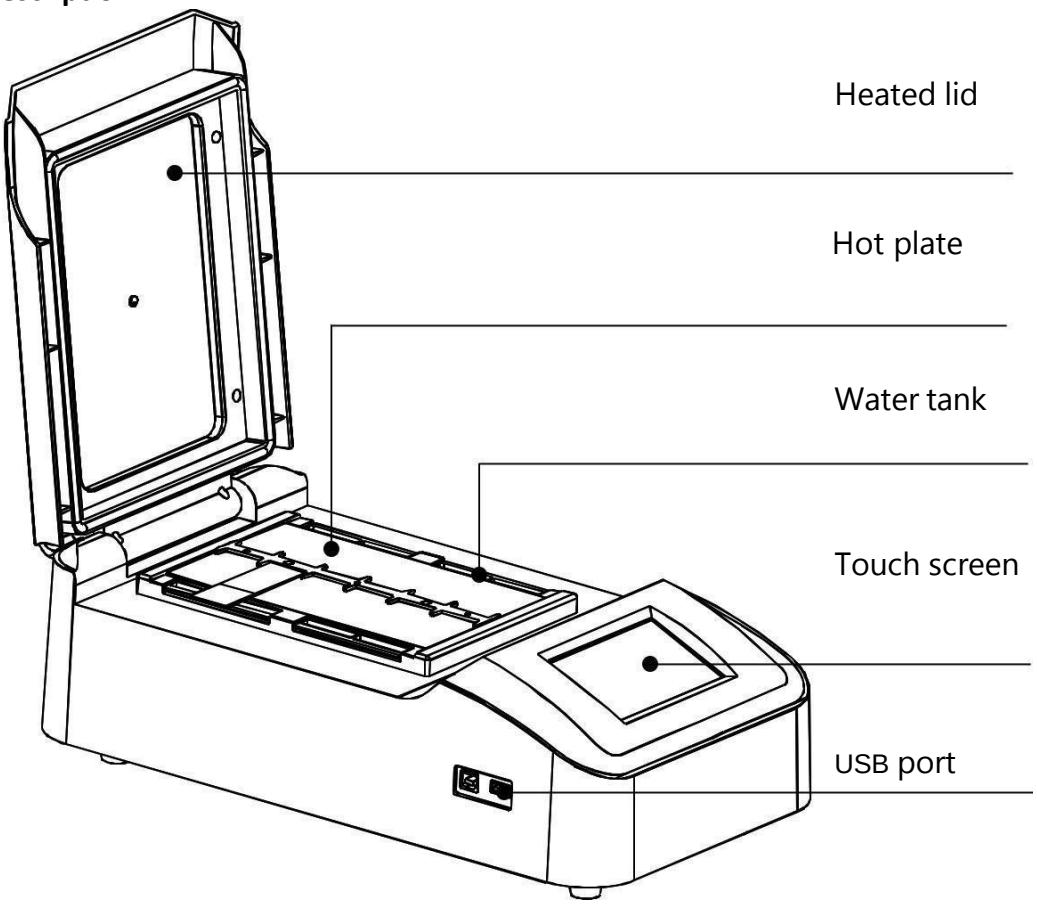

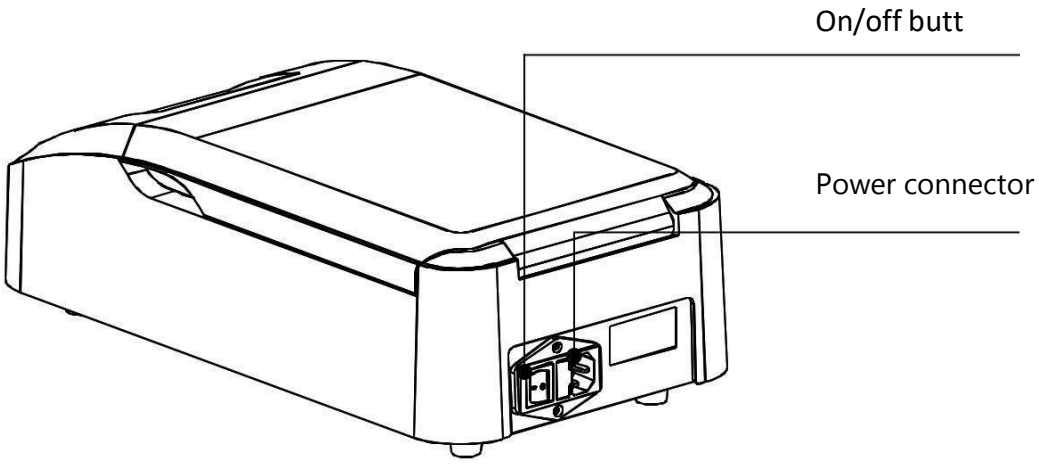

2. How to humidify

Both sides of the hot plate are equipped with 4 water tanks. Before use, please add 12ml of distilled water to each tank and ensure that the water level is 5mm below the edge of the tank (see diagram).

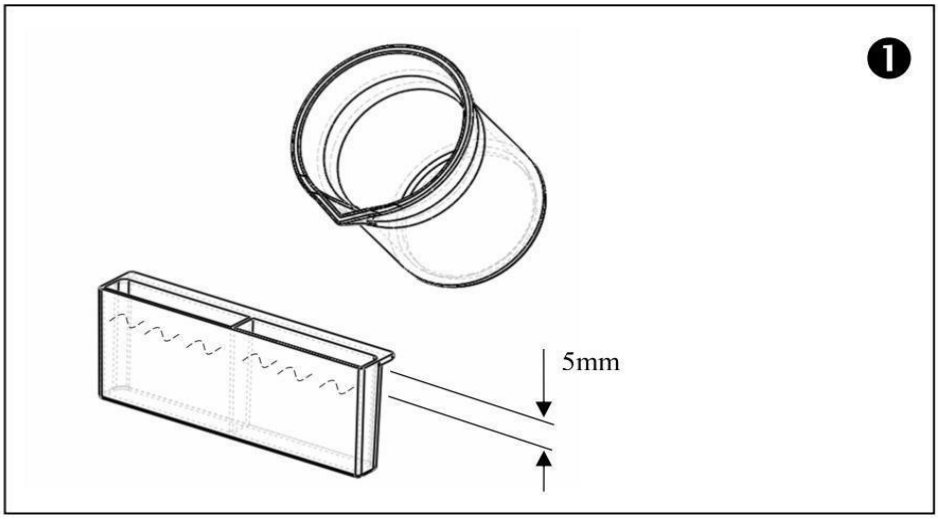

Remarks:

1. To ensure constant humidity during the test, please fill all 4 tanks with water before switching on the unit.
2. Add water to tanks only
3. The 'Humidity plus' function is available for higher humidity levels, see page 10.
4. Please check the water level before each trial and add water when the level is lower than half the height of the tank.

Reposition the tanks on both sides of the hotplate.

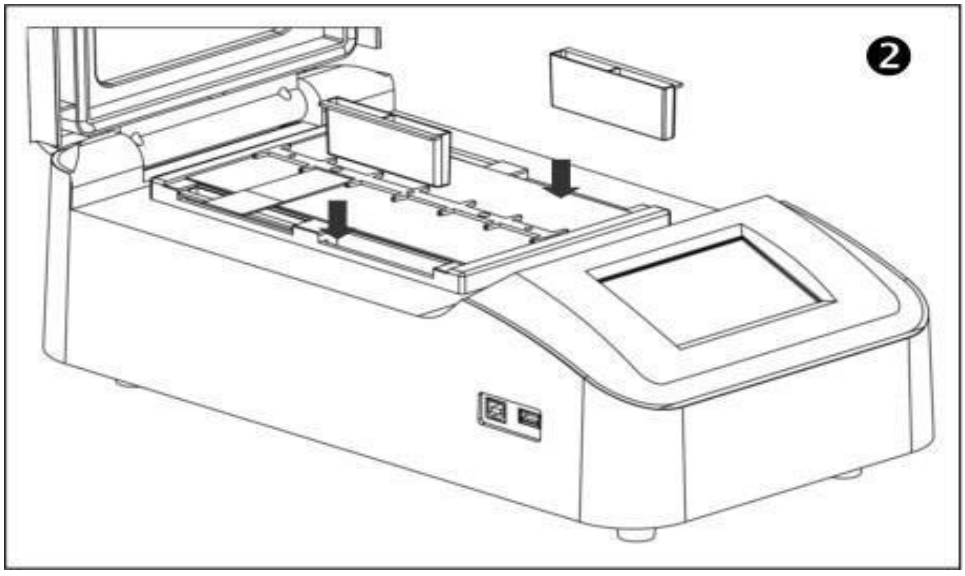

Chapter 4 User's guide

1. Self-test system

Connect the instrument to a properly grounded power supply at the rear of the instrument. The grounded menu,then switch on the Testing System main switch appears on the display.

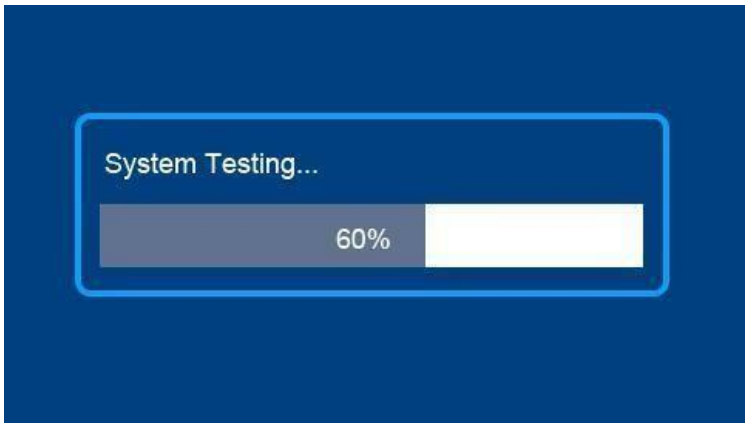

2. Main Menu functions

After the self-test, the main menu appears.

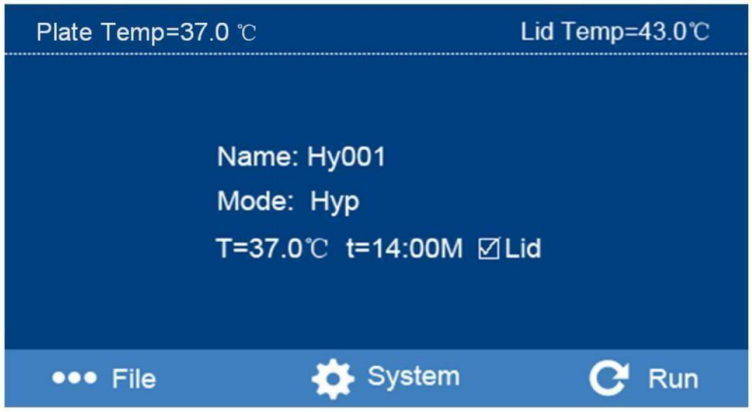

Program menu

System menu

Quick program start

Current hotplate temperature

Current heated cover temperature

When the 'Humidifying plus' function is activated, the 4 water tanks are heated and a dialog box appears asshown in the image below (for more details, see page 12).

Remarks:

1. Before switching on the unit, make sure all 4 tanks are already filled with water.
2. Once this function has been activated, please allow 6 minutes for the humidity level to be sufficient before starting the test. A countdown timer will appear on the display during this warm-up period, and the dialog box will disappear after 6 minutes.

3. During the humidification process, click on 'close' to close the dialog box. The "Humidifying plus" will always be activated.
4. When the dialog box appears, operate the device by pressing File, System, or Run if necessary.
5. the "Humidifying plus" function will be memorized by the device and will be automatically activated forfuture tests unless the function is manually deactivated
6. If the "Humidifying plus" function is no longer required, please deactivate it in the "System parametersetting" menu, and the dialog box will no longer appear.

3. How to create and edit a program

From the main menu, press 

to enter the Program menu.

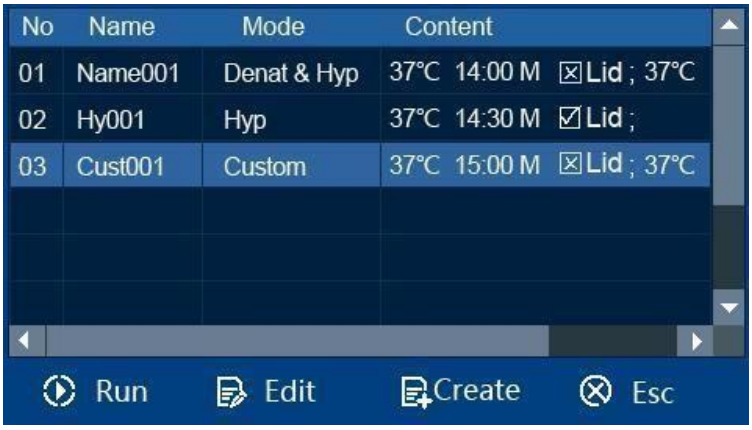

Start program

Create a new program

Edit program

Exit program menu

3.1 Create a new program

In the Program menu, press Create to create a new program.

0 9 Numeric keypad

CE Reset

Validation

Confirm and return to the Program menu

Cancel and return to main menu

Custom — Program mode selection

Cust001 — Program name

Cycle: 20 — Nombre de cycles

M-S — Time unit selection M: minutes, S: seconds

✔ "*open*": Heated lid operation during program execution

✘ "*close*": Heated lid off during program run

3.1.1 Enter program name

Press Cust001, the interface below appears. The program name can contain up to 8

3.1.2 Parameter settings

Press on Custom to select the program type. There are 4 program types: Hyb, Denat&Hyb, Custom and In-situ PCR. These can be used flexibly.

Hyb mode: Hybridization
HT: Hybridization temperature
Ht: Hybridization time
Lid: Choose "*open*" or "*close*".
Denat&Hyb mode: Denaturation and Hybridization

DT: Denaturation temperature
Dt: Denaturation time
Lid: Heated lid not used during denaturation
HT: Hybridization temperature
Ht: Hybridization time
Lid: Choose "open" or "close".

Note:

For "Denat&Hyb" mode, if you select " ▯ " before "Turn on heating up step under mode of Denat&Hyb" on the display, the unit will be able to heat up during this step. If you select " ▯ ", the unit will start to operate
after heating up. Please refer to page 8.

Custom mode: Customizable mode

T1 : First temperature point, t1: First time, lid1 : Choose *"open"* or "*close*" T2 : Second temperature point, t2: Second time, lid2 : Choose *"open"* or "*close*" T3 : Third temperaturepoint, t3: Third time, lid3 : Choose *"open"* or "*close*" T4 : Fourth temperature point, t4: Fourth time, lid4 : Choose *"open"* or "*close*" Cycle: 1-99 cycles, when the number of cycles is greater than 1, the device will cycle T1-T2-T3-T4 automatically
If you only need 2 temperature points (T1 and T2), and you don't need T3 and T4, simply set T3 to 00:00.
Note: When you select *"open"* for the heated cover, the temperature of the heated cover will be identical tothe temperature you have programmed.

In-situ PCR mode: Allows multiple programs to be linked for in-situ PCR experiments. In this mode, upto 6 programs can be linked together.

Note: Once you have set the programs, press  to confirm. If the device displays *"Input error, please re-enter"*, the cursor must be positioned on the wrong program number, indicating that the file cannot be linkedor that the selected program does not exist. The correct program number must then be selected.

3.2 Editing a program

Press 

to edit an existing program. Parameters such as program name, mode, temperature, time and heating lid parameters can be changed. The procedure for changing parameters is described in paragraph 3.1.

4. How to start and stop a program

4.1 From the main or program menu, press *"Run"* to enter the program start-up menu.

Press *"Run"*, the unit will start to heat up to the desired temperature, and the message below will appear on thedisplay. When the temperature has reached the desired level, press "*Start"* to continue.

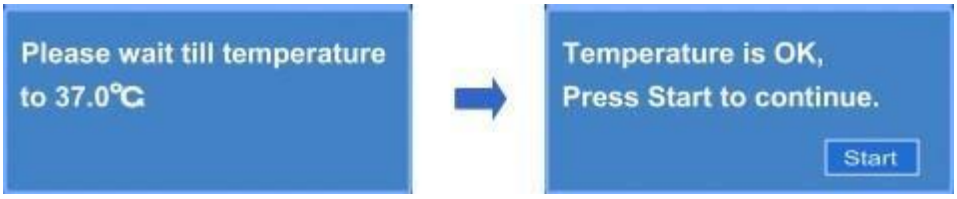

This key is disabled while a program is running.
When the program is finished, press this key to restart the program.

While the program is running, press to stop.

View parameters and temperature in real time.

Exit Start menu

Unit is cooling

Unit is heating up

The appliance temperature has reached the desired value and time starts to run.be deducted.

Program complete

Temperature in real time

Operating time conforms to countdown time

X-axis adjustment

Y-axis adjustment

Temperature adjustment at the center of the graph

Press "Auto Y" to display temperature over the entire screen

4.2 Press *"Stop"*, and the dialog box below appears on the screen. Press "*OK"* to confirm and stop theprogram in progress.

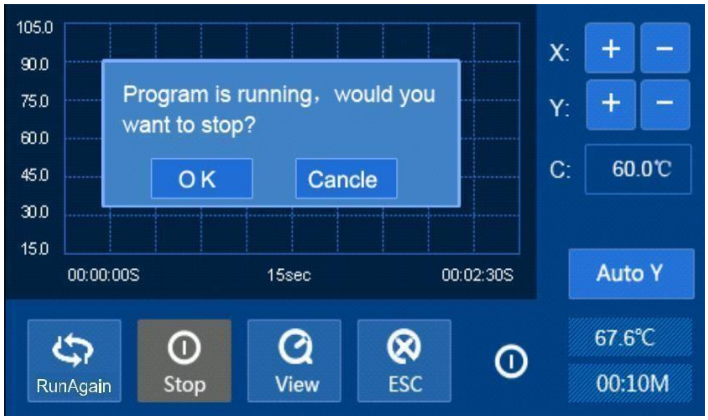

After stopping the program, you can press *"Run Again"* to restart the program. Press *"ESC"* to exit the Start-up menu and return to the Main Menu.

5. How to export data

5.1 Data from the current program can be exported. Insert a USB stick into the USB port on the left-handside of the unit.

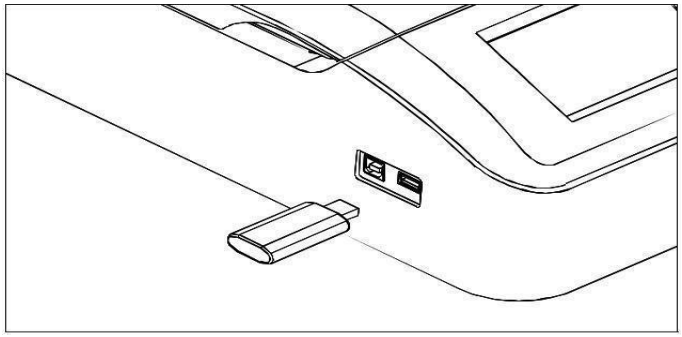

At the end of the program, the dialog box below appears.

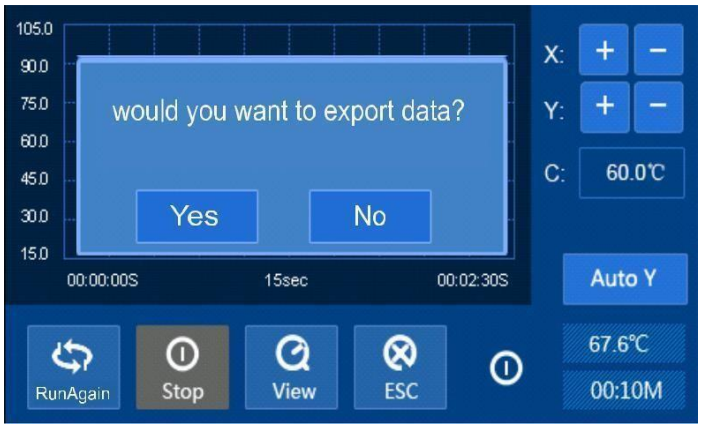

Press *"No"* to cancel export. Press "*Yes*" to export the data. In the meantime, en-

Enter the program date and time. Press "  " to confirm, and the data will be exported to your USBstick.

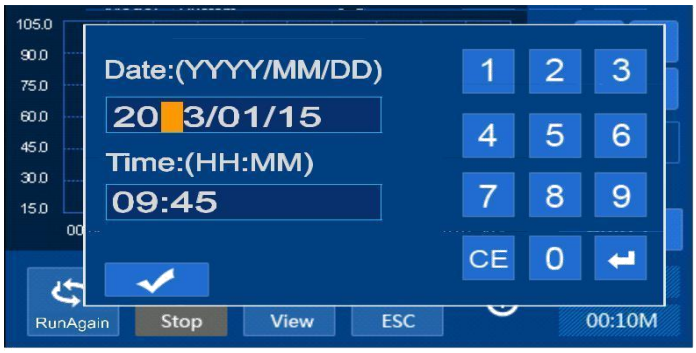

5.2 If no USB key is inserted before the program starts, press " 

". The device opens the following dialog box

Press *"Yes"* to restart the program, the data stored in the device will be permanently erased (replaced by thenew data). Press "*No"* to exit the start-up, the device will ask you to insert a USB key to export the data.

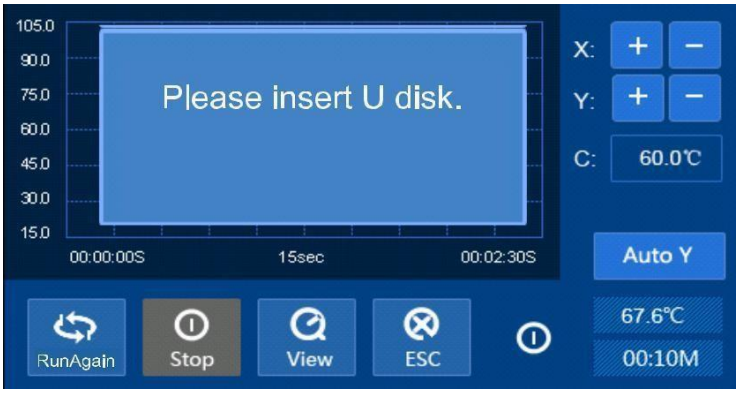

Insert a USB key and export the data following the instructions.

When the user removes the storage system and inserts another one immediately, the device offers to export the data again.

If the user restarts a program or exits the start menu, the data will be deleted.

When you press " ESC " to return to the main menu, the device warns you that you have not exported thedata. Please refer to step 5.2 to export the data or return to the main menu.

6. How to configure system parameters

From the main menu, press System to enter the parameter configuration menu.

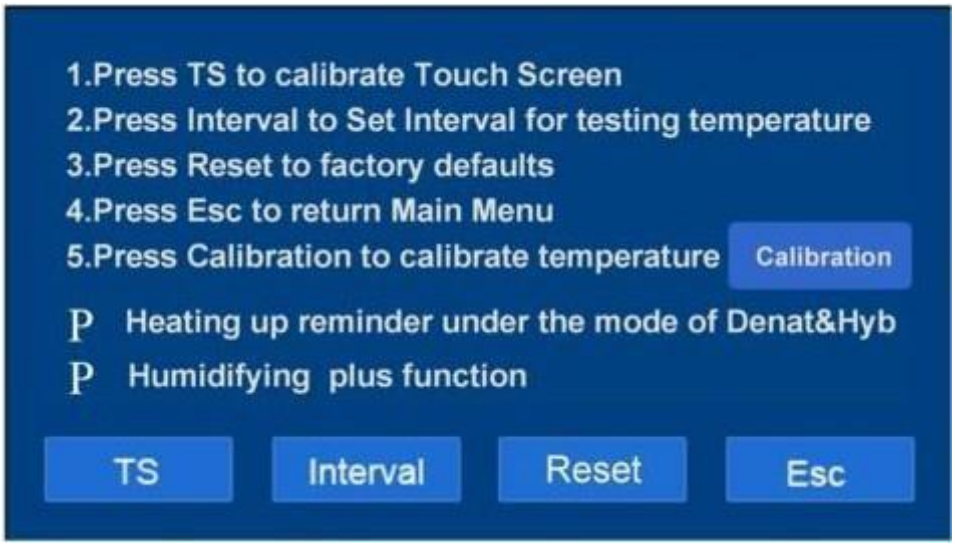

TS	Touchscreen calibration: use the stylus to click the cross displayed. Confirm after calibrating the four points.
Interval	Test time interval: can be set between 1 and 99s, default value is 5s
Reset	Restore factory setting: press to reset the time interval to 5s and delete all programs created.
Esc	Exit system settings and return to the main menu.
Calibration	Temperature calibration: the temperature has been calibrated at the factory; do not change this calibration.

Preheat reminder function:
In Denat&Hyb mode, if you select "Heating up reminder under the mode of Denat & Hyb" on the screen, the unitwill display the preheating reminder dialog box.
If you don't select it, the device will preheat without indicating this in a reminder dialog box.

"Humidifying plus" function

If you select this function, the display will read: "Humidifying, please wait..." and this will disappear once thetime has elapsed. If you do not select this function, there will be no indication on the screen.

Chapter 5 Fault analysis and troubleshooting

No.	Events	Possible causes	Procedure to follow
1	No signal on display	No power supply	Check power supply
		Switch does not work more	Change the switch
		Fuse problem	Replace fuse (5x20250V4A)
		Other	Contact us
2	Actual and displayed temperatures are very different	The temperature sensor works more	Contact us
3	"ERR01" on display with alarm	Problem with theplate heating	Contact us
4	"ERR02" on display with alarm	Problem with theplate heating	Contact us
5	"ERR04" on display with alarm	Temperature control fault plate	Contact us
6	"ERR10" on display with alarm	Problem with thelid heating	Contact us
7	"ERR20" on display with alarm	Problem with the lid heating	Contact us
8	"ERR40" on display with alarm	Temperature control fault of thecover	Contact us
9	"ERR08" on display with alarm	Clock supply circuit fault	Contact us
10	The griddle does not heat up	Temperature sensor or hotplate no longer working	Contact us
11	Lid does not heat up	The temperature sensor or heated cover does not work more	Contact us
12	Touchscreen keys do not don'twork	Wrong position for pressing	Correct your position topress
		Touch screen no longer works	Contact us

Appendix 1 NeoBrite wiring diagram

(This diagram is provided for information only and is subject to change)